XtremeTrim® Low Profile Outside Corner

EXTRUDED ALUMINUM

PRODUCT DETAIL:

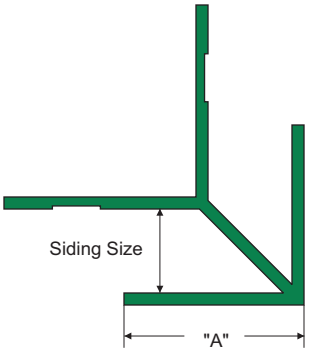

ITEM ID	SIDING SIZE	"A"
XOCLP516	5/16" (8mm)	3/4"
XOCLP716	7/16" (11mm)	1"
XOCLP58	5/8" (16mm)	1-1/8"
XOCLP34	3/4" (19mm)	1-1/2"
XOCLP1	1" (25.4mm)	1-1/2"

DESIGN FEATURES: Offers a clean outside corner for vertical siding panels or lap siding.

MATERIAL: 6063 T-5 .050" (1.27mm) ± .005 extruded aluminum alloy with proprietary coating that protects against harsh weather conditions and allows for paint adhesion.

FINISH: Unless specified all XtremeTrim® items are provided in primed finish. Also available in popular siding/soffit colors in standard face only color match or full coverage CoastalColorCoating™. Clear Anodized is stocked and custom anodized is available (minimums apply).

FASTENERS AND FASTENING: Stainless steel fasteners are recommended. XtremeTrim® profiles may be secured in place with a few SS nails until fastened through panels and into studs during panel or plank fastening per siding manufacturer's instructions.

CUTTING & PAINTING: Use a non-ferrous carbide miter saw blade when cutting XtremeTrim®. Use Direct To Metal (DTM) paint when jobsite painting. See painting guide.

XTREMETRIM® BUTT JOINT: Sealant is required between butt joints where two trims come together. May also be further protected by use of a piece of XtremeFlashing™ behind the butt joint or with a metal flasher behind the joint.

RECOMMENDED APPLICATION NOTES:
Please follow siding manufacturer's best practice guides when installing. XtremeTrim® profiles DO NOT form a moisture management system. The architect and builder are responsible for designing and installing a code compliant building envelope. Before installing XtremeTrim® use either a drainable housewrap or a standard housewrap with a rainscreen system if required by code or siding manufacturer.

BEST PRACTICE FOR CORNERS: Install a continuous strip of housewrap from bottom to top, overlapping per manufacturer's install requirements. Install a 12" self-adhesive membrane tape vertically at corners for additional protection.

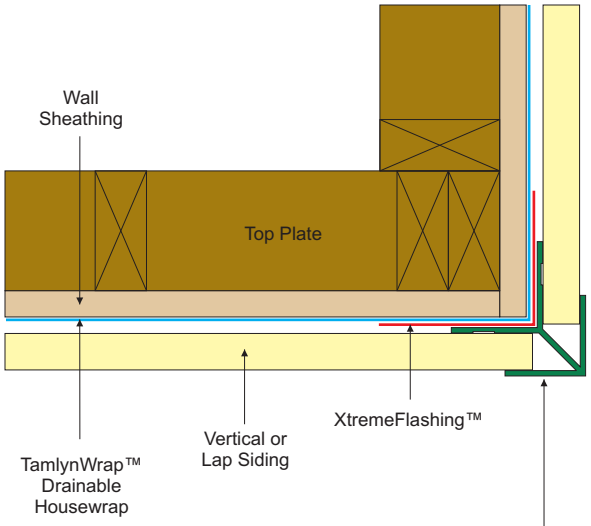

RECOMMENDED APPLICATION:
If more than one length is required, refer to the following for overlapping instructions.

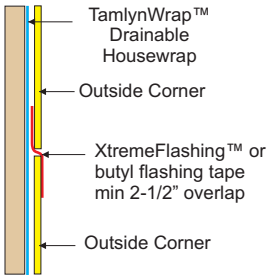

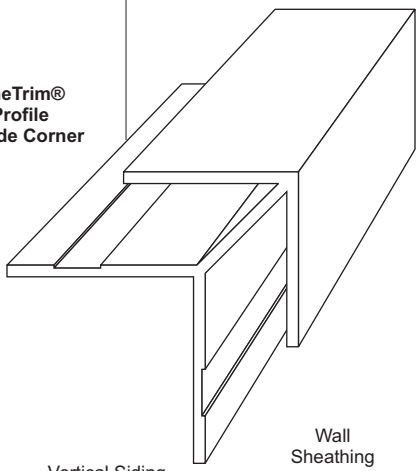

XtremeTrim® Low Profile Outside Corner

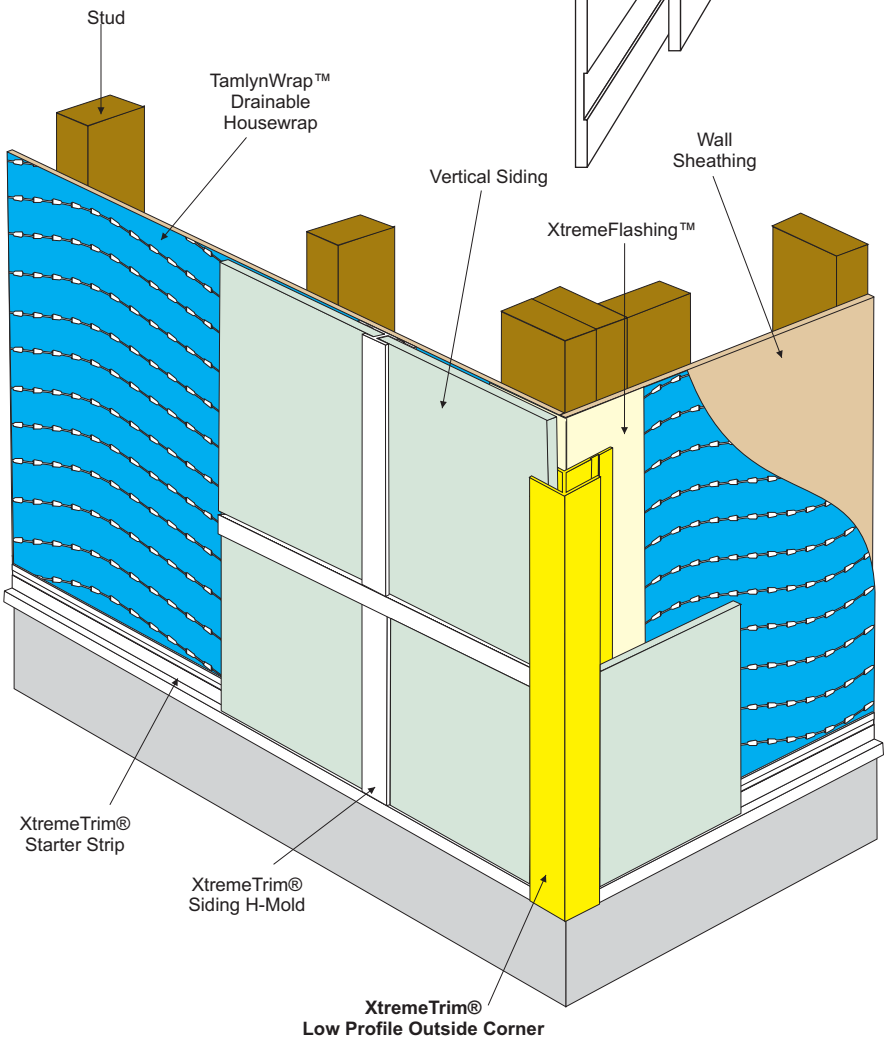

www.xtremetrim.com © 2014 TAMLYN